# 1-11 CYLINDER/CRANKCASE

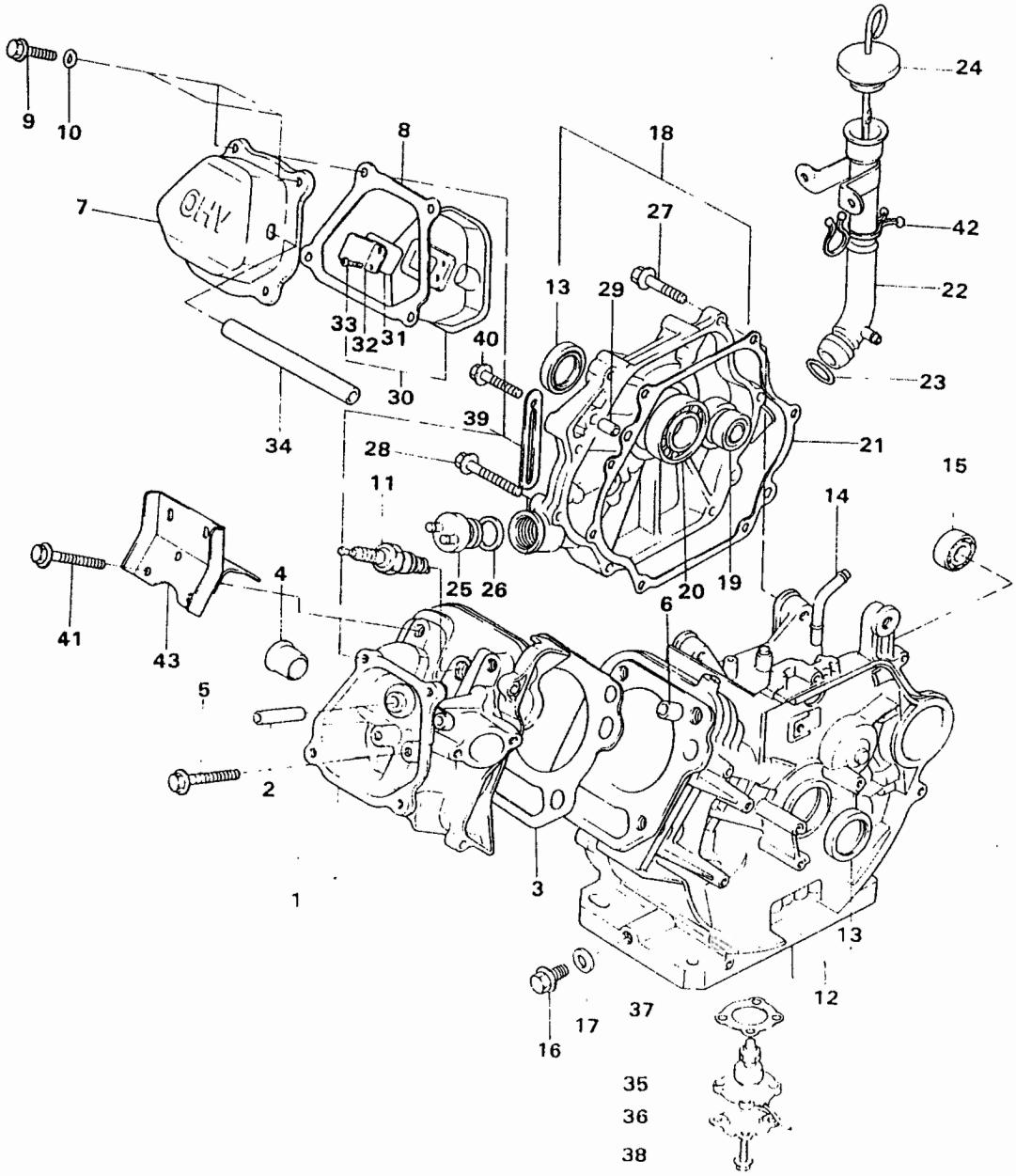

# 1-11 CYLINDERCRANKCASE

| NO | PART NAME | PART NO | Q'TY | REMARK |
|---|---|---|---|---|
| 1 | Head, Cylinder | GG1-111010 | 1 | Includes #2 |
| 2 | Guide, Valve (OS: 0.3) | GG1-111020 | 2 | |
| 3 | Gasket, Cylinder Head | GG1-111040 | 1 | NASB |
| 4 | Guide, Exhaust | GG1-111050 | 1 | |
| 5 | Bolt, Cylinder Head (Lower) | 1LW-000060 | 2 | M10, L = 80 |
| 6 | Pin | GG1-111060 | 2 | |
| 7 | Cover, Cylinder Head | GG1-111070 | 1 | |
| 8 | Gasket, Cylinder Head Cover | GG1-111080 | 1 | |
| 9 | Bolt, Cylinder Head Cover | 1LW-000020 | 4 | M6, L = 16 |
| 10 | Washer, Cylinder Head Cover | 4AW-000110 | 4 | M6 |
| 11 | Spark Plug (BPR5ES) | GG1-111090 | 1 | M14 |
| 12 | Cylinder Ass'y | GG1-111000 | 1 | Includes #13, 14, 15 |
| 13 | Oil Seal | GG1-111320 | 2 | |
| 14 | Union, Pulse | GG1-111110 | 1 | |
| 15 | Bearing, Balancer | 86W-000010 | 1 | |
| 16 | Plug, Engine Oil Drain | GG1-111120 | 1 | M12 |
| 17 | Gasket, Engine Oil Drain | GG1-111130 | 1 | 12.2 × 21 × 2 |
| 18 | Cover Ass'y, Crankcase Side | GG1-111140 | 1 | Includes: 13, 19, 20 |
| 19 | Bearing, Balancer | 86W-000010 | 1 | |
| 20 | Bearing, Crankshaft | 86W-000030 | 1 | |
| 21 | Gasket, Crankcase | GG1-111160 | 1 | NASB |
| 22 | Pipe, Oil Filler | GG1-111170 | 1 | |
| 23 | O-Ring, Oil Filler | 7BW-000010 | 1 | |
| 24 | Gauge, Engine Oil Level | GG1-111180 | 1 | |
| 25 | Plug, Engine Oil Hole | GG1-111190 | 1 | |
| 26 | O-Ring, Engine Oil Hole | 7BW-000020 | 1 | |

# 1-11 CYLINDER/CRANKCASE

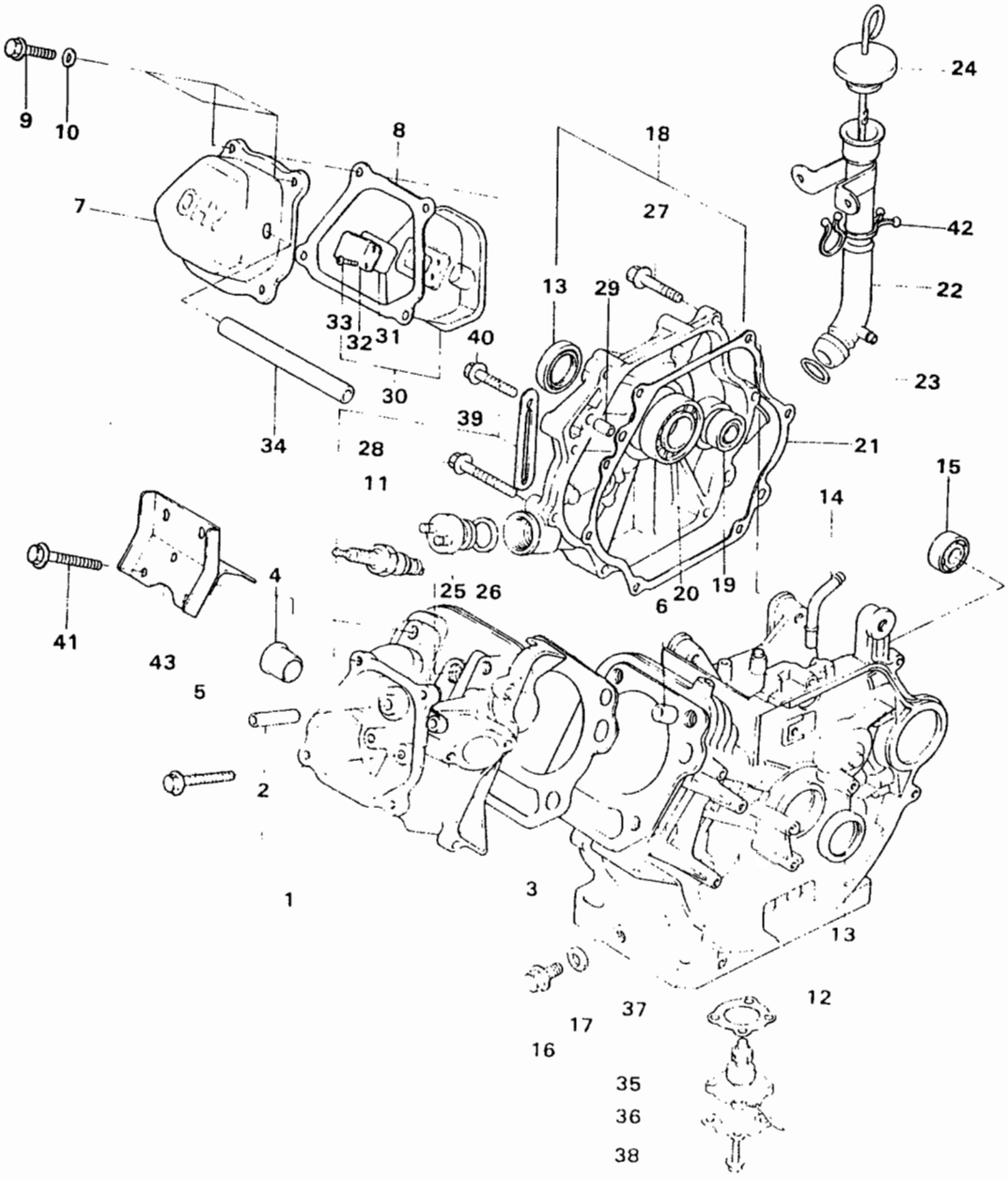

# 1-11 CYLINDER/CRANKCASE

| NO | PART NAME | PART NO | Q'TY | REMARK |
|---|---|---|---|---|
| 27 | Bolt, Crankcase | 1LW-000030 | 6 | M8, L = 35 |
| 28 | Bolt, Crankcase | 1LW-000040 | 1 | M8, L = 45 |
| 29 | Pin, Crankcase Locating | GG1-111200 | 2 | |
| 30 | BodyAss'y, Air Breather | GG1-111210 | 1 | Includs: #31,32, 33 |
| 31 | Valve, Reed | GG1-111220 | 1 | |
| 32 | Stopper, Reed Valve | GG1-111230 | 1 | |
| 33 | Screw, Reed Valve | GG1-111240 | 2 | |
| 34 | Hose, Air Breather | GG1-111250 | 1 | L:135 |
| 35 | Sensor, Oil Level | GG1-111260 | 1 | |
| 36 | Plate, Sensor Reed Guard | GG1-111270 | 1 | |
| 37 | Gasket, Oil Level Sensor | GG1-111290 | 1 | NASB |
| 38 | Bolt, Oil Level Sensor | GG1-111300 | 4 | |
| 39 | Clamp, Acceleration Cable | GG1-119090 | 1 | |
| 40 | Bolt, Acceleration Cable Clamp | 1LW-000050 | 1 | M8, L = 15 |
| 41 | Bolt, Cylinder Head (Upper) | 1LW-000010 | | M10, L = 85 |
| 42 | Clamp, Filler & Hose | GG1-114130 | 1 | |
| 43 | Bracket, Cylinder Head | GG1-103430 | 1 | |